CAMBRIDGE
International Education

Cambridge IGCSE™

DESIGN AND TECHNOLOGY **0445/41**

Paper 4 Systems and Control **May/June 2024**

MARK SCHEME

Maximum Mark: 50

Published

This mark scheme is published as an aid to teachers and candidates, to indicate the requirements of the examination. It shows the basis on which Examiners were instructed to award marks. It does not indicate the details of the discussions that took place at an Examiners' meeting before marking began, which would have considered the acceptability of alternative answers.

Mark schemes should be read in conjunction with the question paper and the Principal Examiner Report for Teachers.

Cambridge International will not enter into discussions about these mark schemes.

Cambridge International is publishing the mark schemes for the May/June 2024 series for most Cambridge IGCSE, Cambridge International A and AS Level and Cambridge Pre-U components, and some Cambridge O Level components.

This document consists of **12** printed pages.

© Cambridge University Press & Assessment 2024

Generic Marking Principles

These general marking principles must be applied by all examiners when marking candidate answers. They should be applied alongside the specific content of the mark scheme or generic level descriptions for a question. Each question paper and mark scheme will also comply with these marking principles.

GENERIC MARKING PRINCIPLE 1:

Marks must be awarded in line with:

- the specific content of the mark scheme or the generic level descriptors for the question
- the specific skills defined in the mark scheme or in the generic level descriptors for the question
- the standard of response required by a candidate as exemplified by the standardisation scripts.

GENERIC MARKING PRINCIPLE 2:

Marks awarded are always **whole marks** (not half marks, or other fractions).

GENERIC MARKING PRINCIPLE 3:

Marks must be awarded **positively**:

- marks are awarded for correct/valid answers, as defined in the mark scheme. However, credit is given for valid answers which go beyond the scope of the syllabus and mark scheme, referring to your Team Leader as appropriate
- marks are awarded when candidates clearly demonstrate what they know and can do
- marks are not deducted for errors
- marks are not deducted for omissions
- answers should only be judged on the quality of spelling, punctuation and grammar when these features are specifically assessed by the question as indicated by the mark scheme. The meaning, however, should be unambiguous.

GENERIC MARKING PRINCIPLE 4:

Rules must be applied consistently, e.g. in situations where candidates have not followed instructions or in the application of generic level descriptors.

© Cambridge University Press & Assessment 2024

GENERIC MARKING PRINCIPLE 5: Marks should be awarded using the full range of marks defined in the mark scheme for the question (however; the use of the full mark range may be limited according to the quality of the candidate responses seen).
GENERIC MARKING PRINCIPLE 6: Marks awarded are based solely on the requirements as defined in the mark scheme. Marks should not be awarded with grade thresholds or grade descriptors in mind.

© Cambridge University Press & Assessment 2024

Question	Answer	Marks	Guidance
Section A			
1(a)	Frame Structure [1]	**1**	
1(b)	Triangulation [1]	**1**	

Question	Answer	Marks	Guidance
2(a)	**Wood** – renewable resource, high availability, can be worked / shaped easily, aesthetic properties **Steel** – resists most forces, can be formed into different shapes / sections. **Concrete** – can be cast into shapes on site or preformed, strong in compression can be reinforced with steel, durable **Composite** – does not require long lengths of timber. Properties of different materials can be included. Complex shapes can be formed. [4×1]	**4**	Accept any other valid alternative benefits for each material. Do not allow cost related benefits.
2(b)	Description to include: • Bending of the beam • Tension on the top face of the beam • Compression on the bottom face of the beam	**2**	1 mark for each valid point included Allow 2 marks for a point that is fully explained.

© Cambridge University Press & Assessment 2024

Question	Answer	Marks	Guidance
3(a)	**L1** is a **second** class lever, **L2** is a **first** class lever [2×1]	**2**	
3(b)	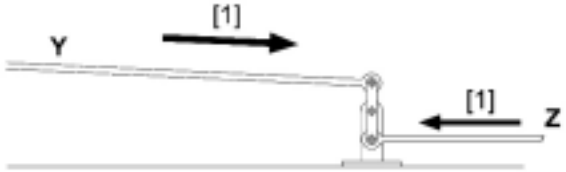 [2×1]	**2**	

Question	Answer	Marks	Guidance
4	Any **two** benefits such as: • Reduced wear on parts / mechanism last longer • Reduced sound • Reduced heat in mechanism • Increased efficiency [2×1]	**2**	Accept any other valid benefits.

Question	Answer	Marks	Guidance
5	Spur gears in a mechanism are used to: • transfer motion between shafts • increase / decrease speed of output • change direction of motion • provide a connection that cannot slip. [2×1]	**2**	Accept any other valid reasons. Do not allow cost related reasons

© Cambridge University Press & Assessment 2024

Question	Answer	Marks	Guidance
6	A – Face covering should be worn [1] B – Face shield should be worn [1] C – Ear protection should be worn [1]	**3**	Allow marks if reason for using device is given.

Question	Answer	Marks	Guidance
7	Any **named** electrical insulating material, [1] e.g. PVC, urea formaldehyde, melamine formaldehyde, rubber, ceramic	**1**	Do not allow plastic, thermoplastic or thermoset plastic.

Question	Answer	Marks	Guidance
8	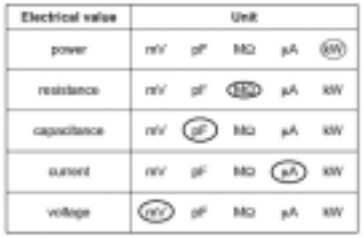 1 mark for each correct	**3**	1 correct = 1 mark 2 correct = 2 marks 3 or 4 correct = 3 marks

Question	Answer	Marks	Guidance
9(a)	A reed switch is operated by placing a **magnet** close to the switch [1]	**1**	
9(b)	Benefits of reed switch include: • No exterior moving parts [1] • Contacts not exposed to atmosphere [1] • Small size / light weight [1] • Fast switching action [1] • Does not have to be touched to operate [1]	**1**	Accept any other valid benefit.

© Cambridge University Press & Assessment 2024

Question	Answer	Marks	Guidance
Section B			
10(a)(i)	The materials in concrete are: • Sand and gravel • Ballast • Cement powder • Water [3×1]	**3**	Award 1 mark for sand and gravel. No marks for stones or rocks Allow addition of PVA or other plasticiser.
10(a)(ii)	Compression [1]	**1**	
10(a)(iii)	Sketches to show reinforcing bar used in the concrete to resist tension. Use of reinforcing bar [1] In a suitable position [1]	**2**	Accept any other valid alternatives
10(a)(iv)	Pillar cross sectional area = 3.142 (Π) x 0.15^2 = 0.0706858 [1] Stress = 8500 / 0.0706858 [1] Stress = **120250 N/m^2** or **120.25 kNm^2** [1]	**3**	Award 3 marks for correct answer with no working. Allow ecf for incorrect area. Allow rounding errors in area calculation.
10(b)(i)	Equilibrium is a state where opposing forces are balanced [1]	**1**	Accept words to that effect.
10(b)(ii)	(1.5 x 1200) + (4 x 2000) = R_2 x 5.75 [1] R2 = 1800 + 8000 / 5.75 [1] R2 = **1704.348 N** [1] R1 = 3200 – 1704.348 = **1495.642** [1]	**4**	Allow rounding errors in answers.
10(b)(iii)	Any **two d**efects such as include: knots, shakes, twisting / warping, bending, termite damage, rot. [2×1]	**2**	Accept any other valid defects.

© Cambridge University Press & Assessment 2024

Question	Answer	Marks	Guidance
10(b)(iv)	Any **one** suitable joining method [1] such as: • Mechanical method, mortise and tenon, tee halving, bridle. • Nail plate / gusset plate • Nails / bolts / screws • Adhesive Clear sketches notes [1] Method of holding joint in place e.g. dowels / bolts / nails / wedges / adhesive [1]	**3**	
10(c)	Suitable example [1] Description of **two** factor of safety measures that apply to example: • Could be Safe Working Load, extension of crane / hoist • Safety of electrical devices • Warning of overhead cables • Training of employees [2×1]	**3**	Accept any other valid safety measures. Allow 2 marks for full description of one measure. Do not allow PPE .
10(d)	Reasons for each method will include: • Nut and bolt – temporary fastening can be removed or adjusted if necessary • Countersunk rivet – permanent method, keeps the surfaces clean and flush • Welded joint – permanent method, joint strong and resists compression / tension / torsion, allows flush surface, no additional materials needed. [3×1]	**3**	Accept any other valid response

© Cambridge University Press & Assessment 2024

<table>
<tr><th>Question</th><th>Answer</th><th>Marks</th><th>Guidance</th></tr>
<tr><td>11(a)(i)</td><td>The mechanism is a crank and linkage [1]</td><td>1</td><td></td></tr>
<tr><td>11(a)(ii)</td><td>Rotary [1] to oscillating [1]</td><td>2</td><td>Allow reciprocating for the output motion.</td></tr>
<tr><td>11(a)(iii)</td><td>Grease is used on the joint because:
• it will not run out of the joint
• it will last a long time
• not so affected by temperature change
• easier to apply to the joint than oil.</td><td>2</td><td>Explanation with two points = 2 marks.
Allow 2 marks for a single point fully justified.</td></tr>
<tr><td>11(b)(i)</td><td><table><tr><th rowspan="2">Type of wheel</th><th colspan="3">Bearing type</th></tr><tr><th>plain</th><th>roller</th><th>ball</th></tr><tr><td>train</td><td></td><td>✓</td><td></td></tr><tr><td>skateboard</td><td></td><td></td><td>✓</td></tr><tr><td>wheelbarrow</td><td>✓</td><td></td><td></td></tr><tr><td>cycle</td><td></td><td></td><td>✓</td></tr></table>[4×1]</td><td>4</td><td>Award no marks for each row with multiple ticks</td></tr>
<tr><td>11(b)(ii)</td><td>Factors for choice will include:
• Speed of rotation / movement
• Materials involved
• Likely radial or axial loading
• Cost of bearing
• Ease of replacement
[3×1]</td><td>3</td><td>Accept any other valid factors.

1 mark per valid factor in the description.
Allow 2 marks for a clear, fully justified description of a single point.</td></tr>
<tr><td>11(c)(i)</td><td>The eccentric will constantly be rising and falling during a single rotation [1]
The cam has 180º of dwell every rotation [1]</td><td>2</td><td>Description must include these two points for both marks.</td></tr>
<tr><td>11(c)(ii)</td><td>The eccentric is driven in both directions, rising and falling, the cam relies on a spring to maintain contact between cam and follower</td><td>1</td><td>Allow mark for understanding shown.</td></tr>
</table>

© Cambridge University Press & Assessment 2024

Question	Answer	Marks	Guidance
11(c)(iii)	Efficiency can be lost through: • Friction in a mechanism • Lack of lubrication • Conversion to unwanted energy forms, heat or sound • Worn parts in the mechanism [2×1]	**2**	Allow 'lack of lubrication' Accept any other valid response.
11(d)	10t–30t gear has a ratio of 3:1 16t–32t gear has a ratio of 2:1 10t–36t gear has a ratio of 3.6:1 Calculation of individual reductions [1] Overall reduction ratio is 3 × 2 × 3.6 = **21.6:1** [1] Speed of driven gear = 864 / 21.6 = **40 rpm**. [1]	**3**	Award 3 marks for correct speed of driven gear with no working.
11(e)(i)	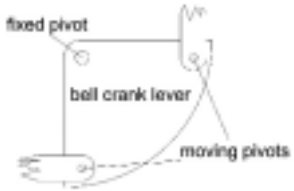 Bell crank lever with a fixed pivot point [1] Connected to two links at 90º to each other [1]	**2**	
11(e)(ii)	M10 means that the bolt has a diameter of 10mm [1] 1.5 refers to the pitch of the thread [1]	**2**	
11(e)(iii)	A spanner will apply **torque** [1] to the body of the bolt when it is used on the hexagonal head	**1**	Allow 'torsion'

© Cambridge University Press & Assessment 2024

Question	Answer	Marks	Guidance
12(a)(i)	The negative leg (cathode) can be identified by: • Negative leg is shorter than the positive leg • Use of a diode tester on a multimeter • Trial and error in a breadboard	**1**	1 mark for a functional method
12(a)(ii)	By using a high value protective resistor there will be a very low current passing through the LED [1] This is not enough to allow it to light up [1]	**2**	Allow marks for understanding shown.
12(a)(iii)	Use of voltage drop, +9 V – 1.75 V = 7.25 V [1] Use of formula I = V/R rearranged to R = V/I [1] 7.25 / 0.015 = **483.3 Ω** [1]	**3**	Allow rounding errors
12(b)(i)	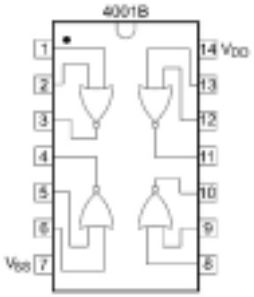 Pins 0 – 7 correctly numbered [1] Pins 8 – 14 correctly numbered [1]	**2**	
12(b)(ii)	Positive labelled at pin 14 and 0V at pin 7 [1]	**1**	
12(b)(iii)	Connecting two inputs to the same gate makes a **NOT** gate or **inverter** [1]	**1**	
12(b)(iv)	**R_1** is a pull down resistor used to ensure that the signal to the NOR gate always has a logic level [1] The NOR gate will not operate reliably if an input is at a floating level [1]	**2**	

© Cambridge University Press & Assessment 2024

Question	Answer	Marks	Guidance
12(c)(i)	The direction of a DC motor can be reversed by changing polarity of the inputs [1]	**1**	Allow mark for understanding shown.
12(c)(ii)	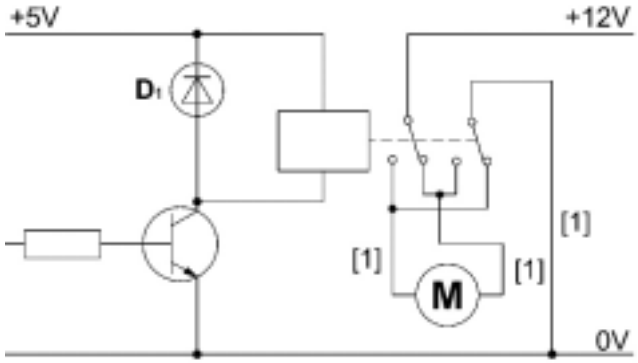 +12 V to a relay common, 0 V to other relay common [1] Both poles of relay normally open to normally closed connected [1] Motor connections, one to positive, one to 0 V [1]	**3**	
12(c)(iii)	The diode is in the circuit to protect the transistor [1] from reverse emf [1]	**2**	Allow marks for understanding shown
12(d)(i)	The layout is designed from the top looking down on the PCB [1] Artwork must have circuit and writing reversed (mirrored) to transfer correctly to the PCB conducting layer [1]	**2**	
12(d)(ii)	Wires shown secured into terminal block [1] Securing method could be small clamp, two holes to thread wires through or similar [1] No damage caused to track areas of PCB [1]	**3**	
12(e)	The two components are **capacitor** [1] and **potentiometer** [1]	**2**	

© Cambridge University Press & Assessment 2024